Boom systems

IBS Series

INDECO
ATTACHMENT SOLUTIONS
a wipro hydraulics company

IBS
boom system

Initially manufactured and marketed by Indeco North America and Indeco Australia, the Indeco IBS Boom System soon had a strong impact on many other markets, having already proven to save time and money in many a quarry and mine, where it is used to reduce bridged and oversized material which could slow down crushing operations. Mounted over the mouth of a primary crusher, the boom system enables the breaker to reach into the mouth of the crusher, reducing oversized boulders as well as clearing any blockages in the hopper. Various remote-control systems enable the operator to manoeuvre the boom from the cabin. By doing so, plant down times can be safely eliminated. Our experience on the Australian and pan-American markets has enabled Indeco to develop a range of boom systems with outstanding reliability, ruggedness, productivity and profitability. Indeco IBS boom systems, made from extra-strength steel alloys, are tailor-made, and are designed according to the individual requirements and specifications set out by the customer.

Features of Indeco boom systems

The electro-hydraulic proportional control valve |1| ensures greater efficiency and precision of movement.
The hydraulic connections to the cylinders |2| are positioned laterally to provide greater protection against breakage.
The hydraulic cylinders, |3| designed and manufactured by the Indeco technical division to exclusive specifications, are oversized to provide maximum power and hydraulic efficiency and ensure greater reliability even in demanding applications.
The rotating distributor |4| for the hydraulic fittings, exclusive to the IBS series, is located inside the base of the arm, ensuring true 360° rotation as there are no hoses to get in the way of movement.
Unlike many competing products, the Indeco IBS boom systems are designed and manufactured to be very similar to those of excavators, not only in terms of their design, but also in their use of special extra-strength steel alloys |5| that provide the best weight/power ratio on the market, thus ensuring versatility and reliability.
Special reinforced box sections |6| inside the boom make it more rugged, and more resistant to torsion and buckling.
The entire hydraulic line mounted on the arm, including the outlet and inlet hoses to the hammer, is made up of high-pressure hoses |7|.
The sintered bronze and aluminium bushings |8|, along with the special-steel pins, are heat treated, which increases their strength and also have special greasing channels.
The mounting base |9| for the IBS boom is particularly robust and oversized for maximum durability.
Anti-drop and load control valves |10|, mounted on the cylinders, prevent the boom from accidentally collapsing and at the same time improve safety.
Access panels |11| to the rotation motor and to the hydraulic distribution system facilitate maintenance.

Here at Indeco we use computational tools such as FEA – Finite Element Analysis – to perform structural and stress tests, making it possible to test and improve the product before the start of the manufacturing process.

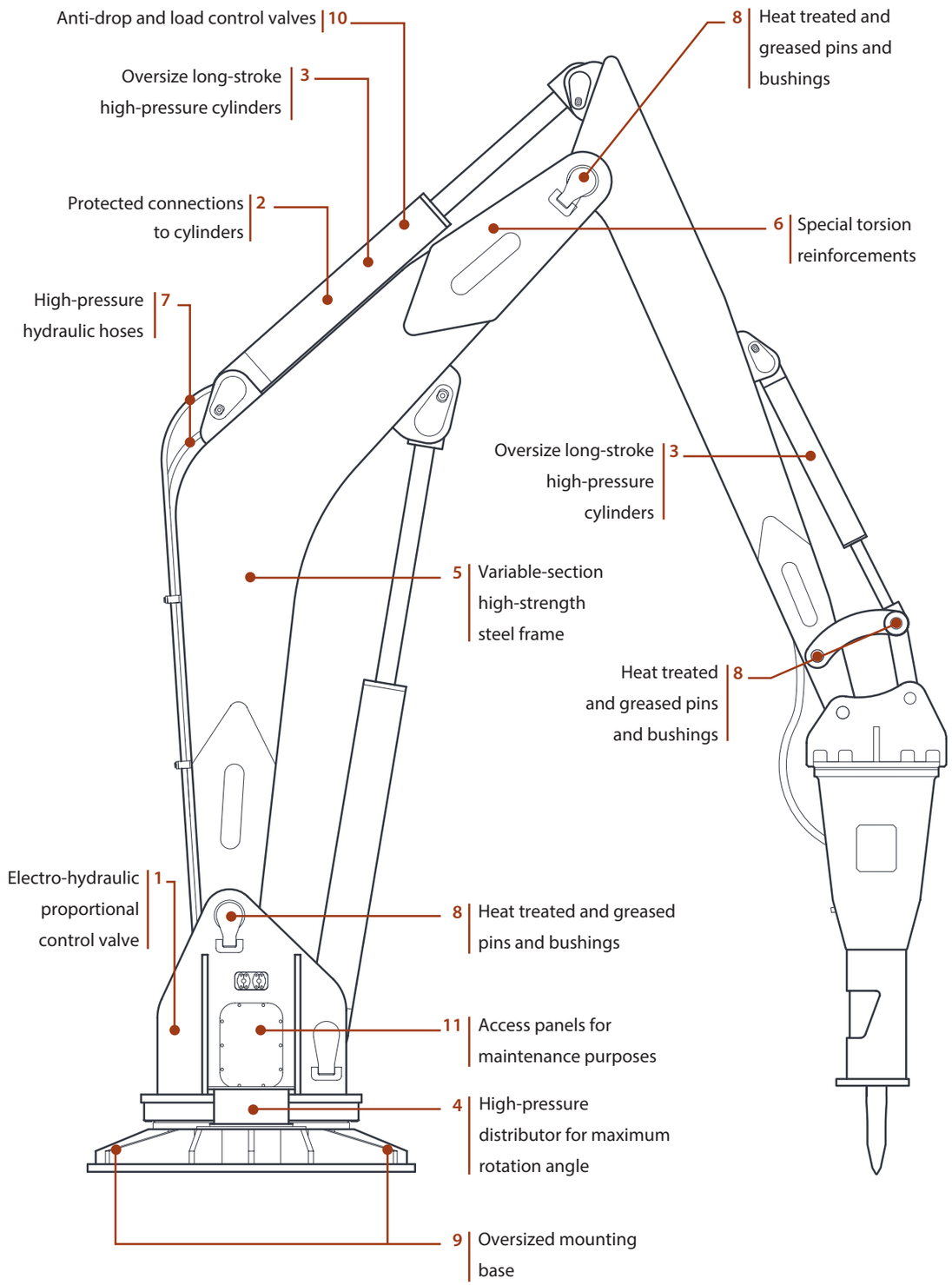

Rotation

360°
slewing ring and hydraulic motor
360° rotation with a fifth wheel and pinion and planetary gear units for maximum operating flexibility makes the Indeco IBS similar to an excavator boom.

How to choose the boom system

HP model choice
based on

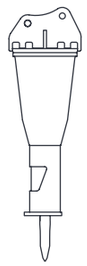

- Type of work
- Type of material
- Boulder size
- Production targets

IBS model choice
based on

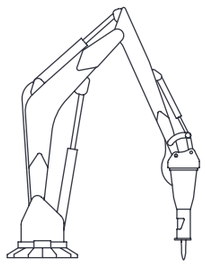

- Working area (type and size of crusher and system)
- Working surface and excavation depth
- 360° rotation
- Number of joints (2 or 3)

Choice of Hydraulic Power Pack / ECU
based on the required power to be installed

Type

On Board
three-phase electric motor

Separate
electrical panel with soft starter inverter

		IBS 33	IBS 40	IBS 50	IBS 62	IBS 76	IBS 94	IBS 116	IBS 143
		Maximum horizontal length (m)*							
Power Pack (Kw)	Hammer (Kg)	3,3	4	5	6,2	7,6	9,4	11,6	14,3
15	HP 100 (59)	IBS 33-400	IBS 40-400						
	HP 150 (80/98)	IBS 33-400	IBS 40-400						
	HP 200 (160)	IBS 33-400	IBS 40-400						
	HP 400 (230)	IBS 33-400	IBS 40-400						
21	HP 550 (320)	IBS 33-700	IBS 40-700	IBS 50-700					
	HP 600 (390)	IBS 33-700	IBS 40-700	IBS 50-700					
	HP 700 (440)	IBS 33-700	IBS 40-700	IBS 50-700					
30	HP 900 (550)	IBS 33-1200	IBS 40-1200	IBS 50-1200	IBS 62-1200				
	HP 1200 (650)	IBS 33-1200	IBS 40-1200	IBS 50-1200	IBS 62-1200				
37	HP 1500 (850)		IBS 40-1800	IBS 50-1800	IBS 62-1800	IBS 76-1800			
	HP 1800 (1000)		IBS 40-1800	IBS 50-1800	IBS 62-1800	IBS 76-1800			
45	HP 2000 (1200)				IBS 62-2500	IBS 76-2500	IBS 94-2500	IBS 116-2500	IBS 143-2500
	HP 2500 (1500)				IBS 62-2500	IBS 76-2500	IBS 94-2500	IBS 116-2500	IBS 143-2500
55	HP 2750 (1690)					IBS 76-3500	IBS 94-3500	IBS 116-3500	IBS 143-3500
	HP 3500 (2200)					IBS 76-3500	IBS 94-3500	IBS 116-3500	IBS 143-3500
75	HP 4000 (2500)						IBS 94-5000	IBS 116-5000	IBS 143-5000
	HP 5000 (3150)						IBS 94-5000	IBS 116-5000	IBS 143-5000

*Lengths can be customized according to the customer's requirements

The information in this catalog is subject to change without notice and without any obligation or responsibility on our part. The content of this catalog is provided as a courtesy to readers and constitutes non binding information only.

Accessories

Indeconnect system

New remote monitoring system, based on the principles of the Internet of Things, to prevent equipment obsolescence and keep high performance. The **'Indeconnect'** |1| system consists of a **device** equipped with 4G technology for a wireless connection to the network, to be mounted on the equipment, and a cloud-based **web platform** you can access from mobile devices (with an app) or from PC, that lets you view the data transmitted in real time by each installed device: working hours, working position in space, hydraulic oil temperature, ambient temperature, GPS position, and more.

Through Indeconnect you can:

- **Monitor productivity**, making sure each Indeco tool is working as intended
- **Check operations**, verifying in real time the various internal and external parameters of the equipment to make sure that it is used in optimal conditions and correctly
- **Increase security,** by remotely checking the position of the equipment through GPS
- **Plan maintenance**, monitoring the health of each Indeco tool in real time, also through the automatic alert and messaging system that lets you order spare parts and reduce machine downtime to a minimum
- **Optimise rental,** by supervising and monitoring the management of rented equipment.

Three articulations

The Indeco hydraulic boom can be made with three articulations |2| so as to increase the working area when the hammer is in a vertical position, to reach inaccessible positions under the mounting base, and to increase versatility of use.

1 |

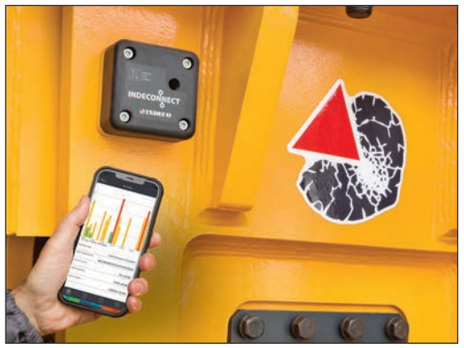

2 |

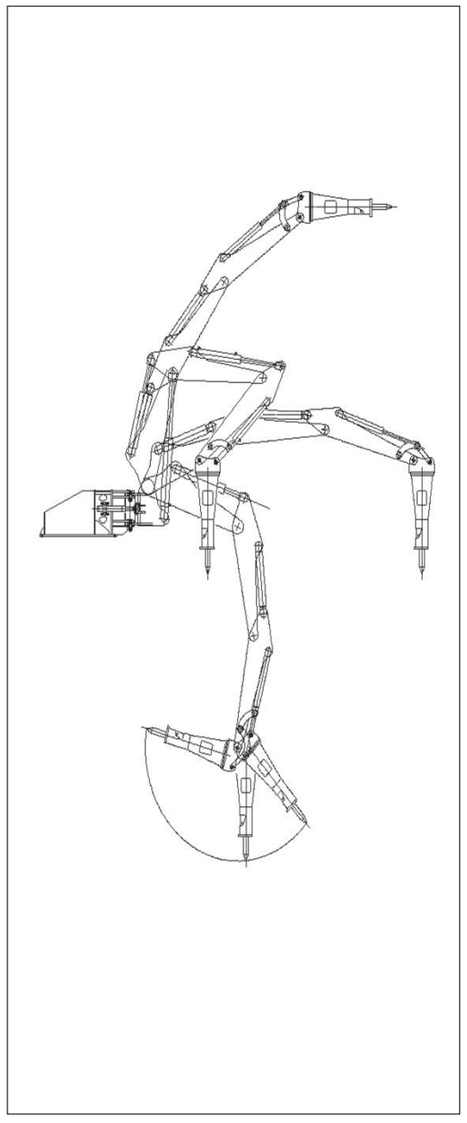

3 |

4 |

5 |

6 |

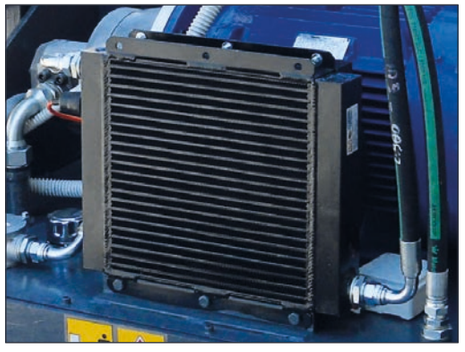

Automatic greasing kit for boom and hammer

Optimises grease consumption, cutting out the machine down times once needed to lubricate moving parts.

The kit includes a programmable pumping unit pack |3|, hoses and hammer and boom fittings.

The system increases the service life of all the ball bushings on the boom and in the moving parts of the hammer.

Control system

The Indeco IBS has a highly efficient control system with an electro-hydraulic proportional valve.

Indeco has designed two different types:

- remote control |4|, with a special cable up to 90 m in length
- wireless remote control |5| for distances of up to 30 m.

Heat exchanger

High-efficiency radiator |6| and auxiliary cooling fan to keep the oil temperature constant even in extreme operating conditions.

Oil warmer

At very low working temperatures and in cold climates, the oil warmer |7| keeps the oil temperature constant.

Oil level indicator

Indicator |8| which warns the operator when the oil level is too low.

Temperature indicator

Indicator |9| which warns the operator when the temperature is too high.

Hydraulic feed pump

There are three types of hydraulic feed pump |10|:

- gear pumps, for operating pressures of up to 200 bar
- axial piston pumps for operating pressures of over 200 bar
- variable displacement pumps with load sensing.

7 |

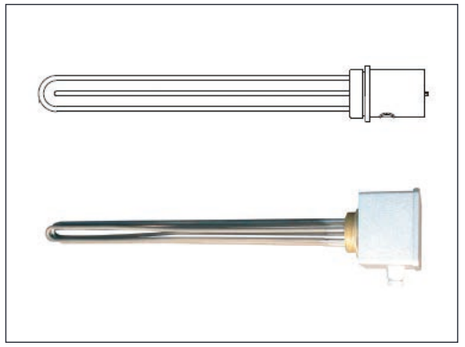

8 |

9 |

10 |

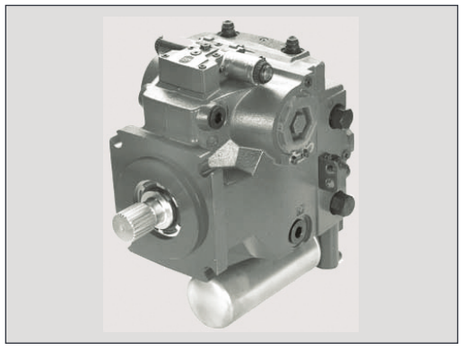

Application areas

			IBS
Mining and Quarry	Preliminary works	• Overburden removal	
		• Bench, road & ramp leveling	
		• Roof, face & rib scaling	
	Secondary demolition	• Boulder reduction in rock pile	
		• Removing blockages at crushing systems	○
	Primary rock breaking	• Selective rock breaking	
		• Blastfree mining	

The complete range of Indeco products

Products	Weight/Length
HP Hydraulic hammers	from 59 to 11050 Kg
IFP fixed pulverisers	from 750 to 4550 Kg
IRP rotating pulverisers	from 570 to 4500 Kg
IDC Primary Demolition Crusher	from 900 to 7200 Kg
IMP Multiprocessor	from 1500 to 4900 Kg
IMP Mutiprocessor Car Dismantler	1500 Kg
IHC fixed compactors	from 200 to 1280 Kg
IHC R rotating compactors	from 425 to 1520 Kg
IMG S-D-H-L-T Multi Grabs	from 285 to 2990 Kg
ISS Shears	from 480 to 11000 Kg
IRC rail cutters	from 4200 to 4300 Kg
IMH Mulching Heads	from 385 to 1930 Kg
IBS boom systems	from 3,3 to 14,3 m*

*Lengths can be customised on the basis of the customer's needs.

EN

Quality Management
System Certification
UNI EN ISO 9001:2015

Member of

INDECO IND S.p.A.
V.le G. Lindemann, 10 - 70132 Bari Z.I. - Italy
PH +39 080 531 33 70 - **F** +39 080 537 79 76
@ info@indeco.it - www.indeco.it/en

AUTHORISED DEALER

26-07-G-B-EN-04-01

The contents of this publication may not be reproduced in whole or in part without prior authorization from the INDECO IND S.p.A. All rights reserved.
Trademarks used in this catalog are the property of their respective holders.